B720

Floor spring

Construction & Technical details

- High grade cast iron mechanism body is housed within a galvanized steel loose box which is zinc protected & painted for corrosion resistance.
- One unit suit for both single & double action doors where surface mounted closer cannot be fitted.
- Internal mechanism components utilizing heat treated high alloy steels & ball bearing for optimum efficiency.
- The speed adjustment valves can not be backed out of Floor Spring when adjustment that eliminates oil leakage from the valves.
- Stable hydraulic fluid for any climatic operation & constant lubrication.

Accessories

- Standard arm
- Offset arm

Dimension

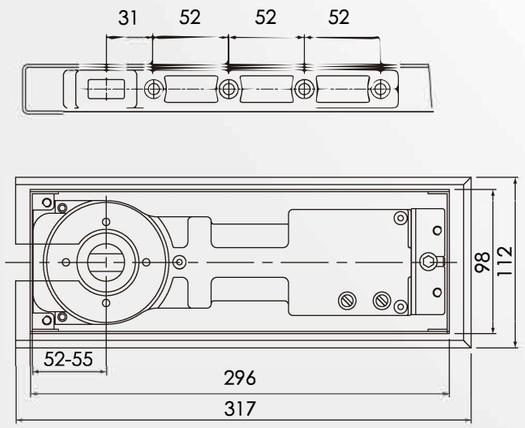

Features

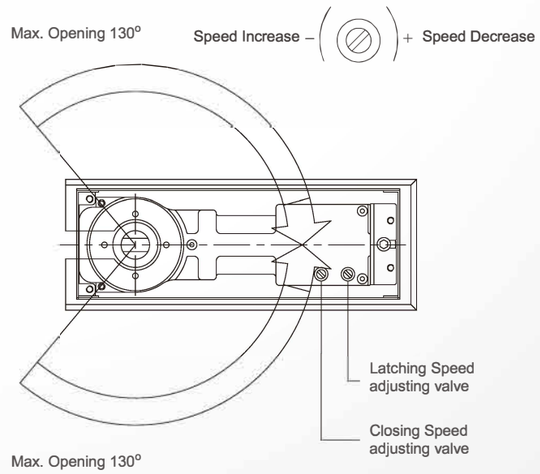

Closing force	Max. Door Width	Max. Door Weight
EN 2	850 mm	150 kg
EN 3	950 mm	150 kg
EN 4	1100 mm	150 kg

- Easy & Accurate Speed Adjustment
- Closing speed adjustable (130° ~ 15°)
- Adjustable Latching Action (15° ~ 0°)
- Maximum door opening angle at 130°
- Mechanical hold-open at 90°
- Cam system for easy door opening
- Floor recess ：48 x 98 x 296 mm
- Exchangeable spindle design up to 50mm

Closer mechanism adjustment in loose box for		
Length：6mm	Width ：6mm	Heigh ：4mm